# SPOTLIGHT LIDER D 850 35W 23° GREY | ON/OFF

Article number: N001-K0001-RF850-H5-G23-ZA03_900-S1-AA1

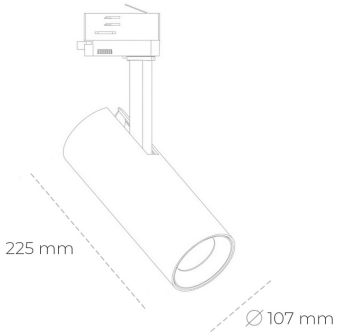


| | |
|---|---|
| LED | COB |
| Light colour | 5000 [K] \| |
| CRI | 80 |
| Led chip flux | 5212 [lm] |
| Luminous flux | 4690 [lm] |
| System power | 35 [W] |
| Luminaire Efficiency | 134 [lm/W] |
| Beam angle | 23° |
| Controller | ON/OFF |
| MacAdam | 3 SDCM |

## LUMINAIRE

| | |
|---|---|
| Weight | 1,03 [kg] |
| Protection rating IP , IK , class | IP 20, IK 1, |
| Luminaire colour | GREY |
| Cover | Plastic |
| Operating voltage | 220-240V 50-60Hz |

## OPTIONS

RAL colours on inquiry, honeycomb louver on inquiry , Casambi on inquiry, DALI on inquiry, Phase-cut dimming on inquiry.

## Spotlight LED

Track mounted LED spotlight. Aluminium housing. Ceiling base installation possible. Available in white, black and grey. Any RAL palette colour available on enquiry. Reflector beams available: 15°, 23°, 38°, 45° and 60°. Maximum power is 37W.

Note: All data are typical values. Tolerance of measurements +/-10% System features may change with product improvements due to technical advances.

Generated: 02.06.2024

+48 32 388 80 00
www.cora.pl
cora@cora.pl
Street: Ignatza Hakuby 18
41-914 Bytom, Polska